CSM

# CRYOGENIC

SPECIALTY MANUFACTURING

QUALITY WITH A DIFFERENCE

## *Green Energy Solutions*




ISO 9001 : 2015 11960/1

ISO 14001 : 2015

*Stay cool under pressure*

**www.csm-cryogenic.com**



# TABLE OF CONTENT


| | |
|---|---|
| Liquid Hydrogen: The Clean Energy of Tomorrow | 2 |
| Vacuum Jacketed Technology | 3 |
| Making A Smart Choice | 4 |
| CSM Solution for Realising the Hydrogen Future | 5 |
| Product Application | 6 |
| CSM Cryogenic Transfer Pipe | 8 |
| CSM Cryogenic Transfer Hoses | 9 |
| CSM Cryogenic Bellow Valves | 10 |
| CSM Cryogenic Welded Connection | 11 |
| Turnkey Solutions | 12 |
| Worldwide Sales and Service | 14 |




# Liquid Hydrogen

## The Clean Energy of Tomorrow!

Hydrogen is increasingly viewed as the energy of the future due to its unique combination of abundance, versatility, and environmental benefits. As the most abundant element in the universe, hydrogen can be produced from various sources, including water through electrolysis and natural gas through steam methane reforming. Its versatility allows it to be used across multiple sectors, such as transportation, industry, and residential heating. Additionally, hydrogen's clean energy profile, high energy density, and capability for energy storage make it a compelling option for a sustainable energy future.

Hydrogen can be stored and used as a source of energy in several forms: liquefied hydrogen (LH2), compressed hydrogen (CGH2), and cryo-compressed hydrogen (CcH2).

Liquefied hydrogen, due to its high density, is a cost-effective method for transporting large quantities of hydrogen for substantial infrastructure and mass use.

However, the cryogenic nature of liquid hydrogen means that boil-off is an inevitable issue throughout the hydrogen supply chain.

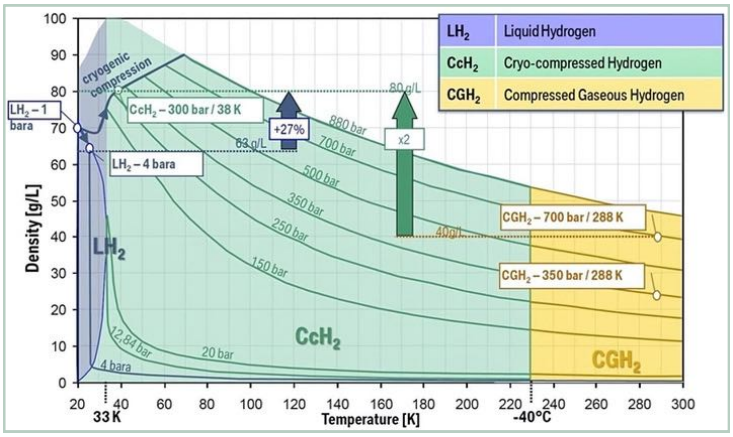


Photo Credit: Slide 8, "Cryo-compressed Hydrogen Storage," BMW Group presentation by Klaas Kunze and Oliver Kircher, Cryogenic Cluster Day, Oxford, U.K. Sep. 28, 2012.

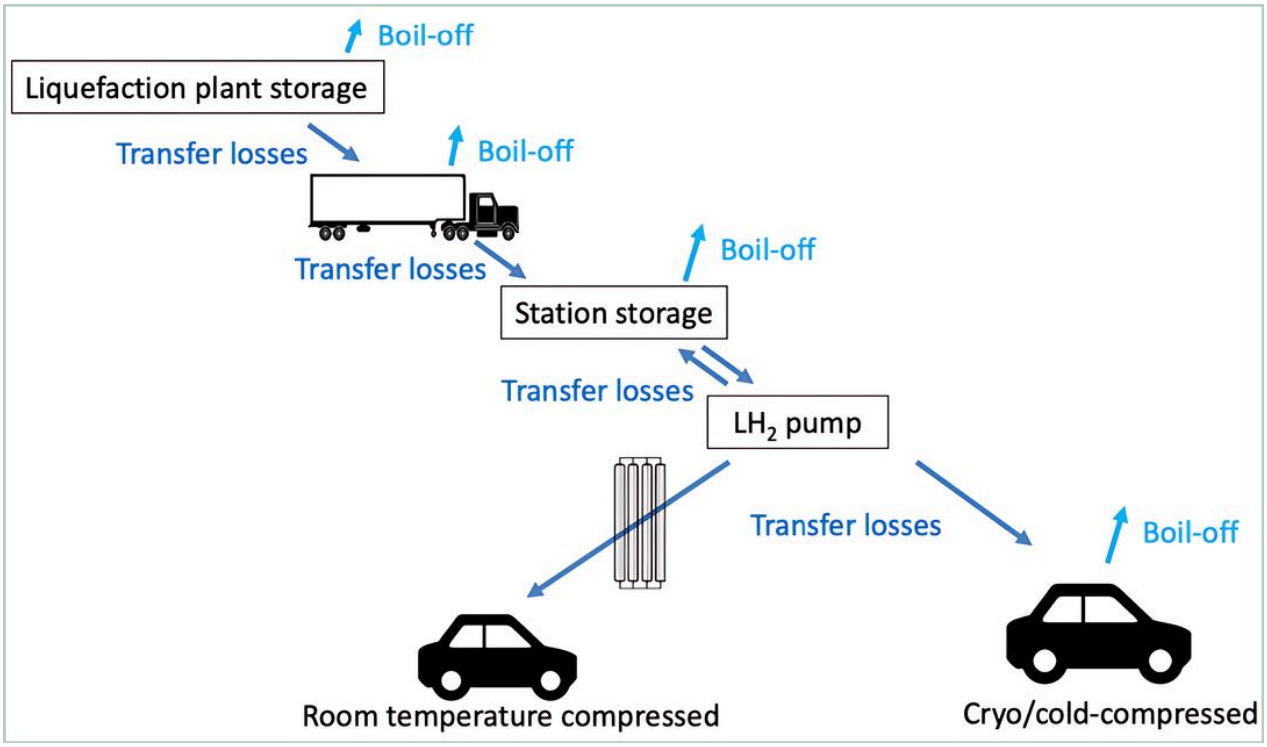


Photo Credit: US DOE, "Thermodynamic and Economic Modelling of Boil-off Losses in Liquid Hydrogen Handling Processes" presentation by Guillaume Petitpas, Fuel Cell Technologies Office Webinar, Livermore, U.S.A. June. 26, 2018.

# Vacuum Jacketed Technology

## Introduction

Vacuum Jacketed Pipes, also known as VJPs, were first developed in the early 1900s. However, the technology did not become commercially available until the 1960s when it was used to insulate cryogenic transfer lines. Since then, VJPs have been widely used in various industries, including in the transportation of liquefied natural gas (LNG), in the food and beverage industry, in the semiconductor industry, and in medical applications. In recent years, VJPs have also gained popularity in biomedical, zero carbon energy, quantum computing and particle physics for their energy-efficient properties.

Vacuum Jacketed Pipes (VJPs) have come a long way in terms of insulation technology. Over the years, there have been many advancements in the materials and design used in VJPs, which have greatly improved their insulating capabilities.
One major development has been the use of advanced insulation materials, such as multilayer insulation. VJPs have also benefited from advances in manufacturing technology. For example, modern VJPs are produced using advanced welding techniques and automated manufacturing processes, which ensure a high level of quality control and consistency in the production process. However, despite these advancements, it is not possible to completely eliminate heat transfer (leaks) in any cryogenic system.

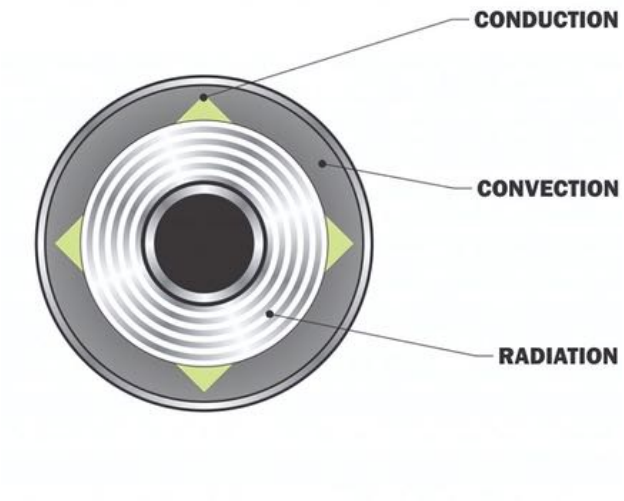


**Conduction** - CSM VJP reduces conduction by using low conductivity radial supports to prevent the inner pipe from touching the outer pipe.

**Convection** - is prevented by removing the gas molecules from the space between the inner and the outer pipe at high vacuum 10-5Torr. Vacuum helps reduce molecular conduction to near zero.

**Radiation** - the inner pipe is wrapped with multiple layers of reflective radiation shield and low conductive spacer material to reduce radiative heat transfer.

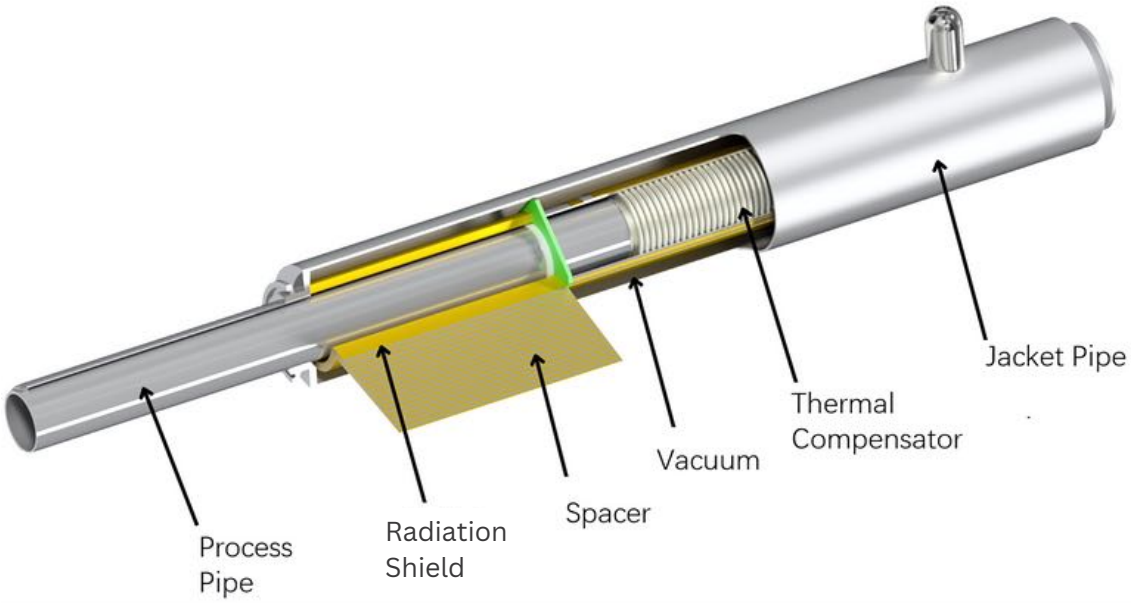

# Making A Smart Choice

## Value vs. Cost of Heat Leak

Due to the extreme temperature difference between cryogenic media such as Liquid Hydrogen (LH2) and ambient air, a large amount of heat will transfer even through a very short section of uninsulated or poorly-insulated pipe component very quickly. This can have a substantial impact on the entire system.

While the loss may not be immediately evident or substantial within a single day, over time, this cumulative effect can translate into thousands of dollars in losses. An escalated heat leak at any juncture within the system can induce two-phase fluid formation, heightening pressure drop and subsequently disrupting the smooth liquid flow. This disruption results in an overall reduction in flow rate. The manifestation of two-phase flow triggers notably elevated pressure drops throughout the pipe network, leading to irregular liquid delivery and resulting in elevated liquid temperatures at the cryogen use point. Additionally, this condition accelerates the wear-and-tear of valve seats and other vital system components.

## Getting the Return on Your Investment

Although the initial purchase price of a VJP system can be higher than for non-vacuum insulated Foam Insulated Pipe, VJP systems typically provide a quick payback by reducing operating costs. These systems can significantly minimize the liquid losses caused by heat leaks, provide a longer life cycle than conventional foam-insulated copper piping, and do not decrease in performance over time.

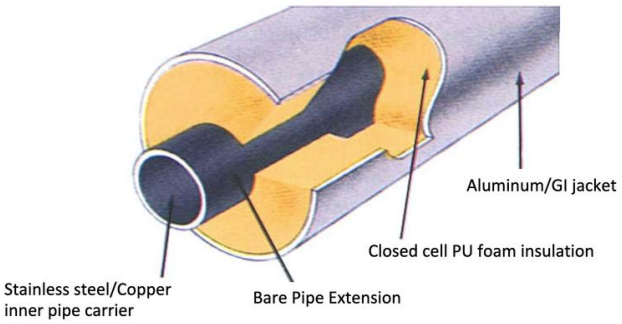


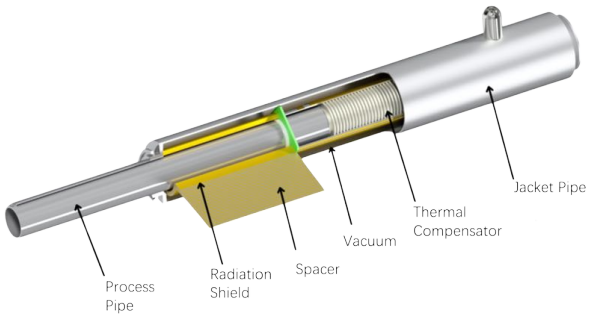


## Heat Leak / Performance Comparison Chart

The table below summarizes the comparison of heat leaks between the Vacuum Insulated stainless steel pipe and the PU insulated copper pipe of various sizes at 77K:

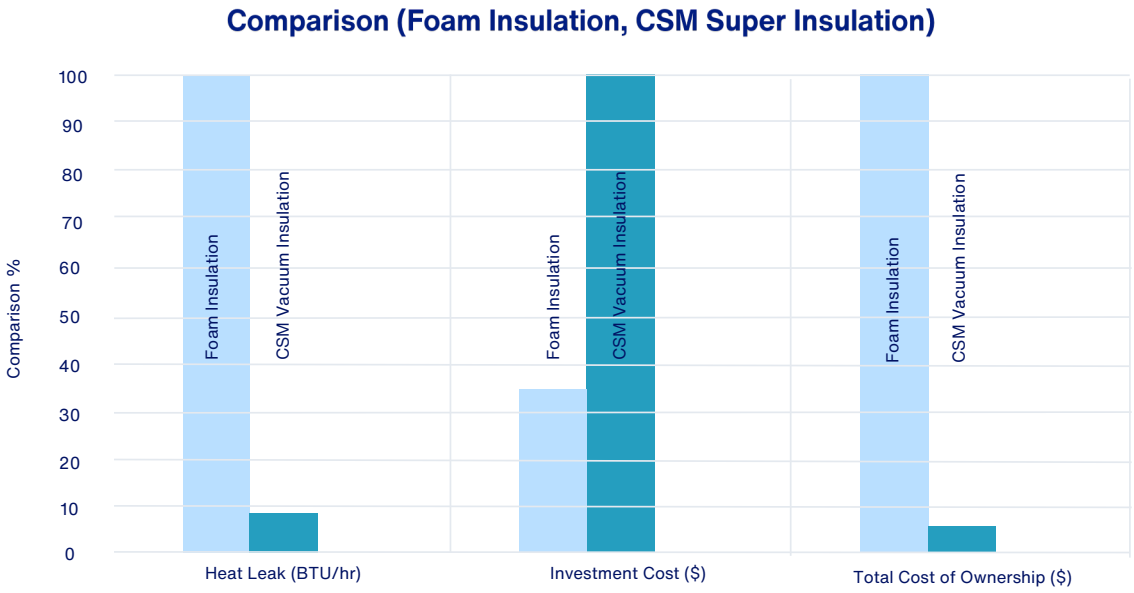

# CSM Cryogenic's Solution for Realising the Hydrogen Future

## Super Insulated Vacuum Valves, Hoses and Pipes

Central to our product offerings is the development and manufacturing of super insulated vacuum hoses and pipes. These components play a foundational role in the safe and efficient transportation of liquid hydrogen.

Our expertise in cryogenics allows us to engineer super insulation solutions that minimize heat transfer, ensuring the preservation of hydrogen's ultra-low temperatures throughout the supply chain. Whether for fueling stations, industrial processes, or power generation, our super insulated vacuum hoses and pipes provide the backbone for the seamless integration of liquid hydrogen.




## Orbital Welding Manufacturing Process

At CSM, our commitment to precision and excellence is embodied in our orbital welding manufacturing process. This state-of-the-art technique ensures the integrity and reliability of critical components in liquid hydrogen infrastructure.

Orbital welding delivers consistent and high-quality welds, guaranteeing leak-free connections and enhancing the safety and performance of liquid hydrogen systems to meet the stringent demands of utilizing liquid hydrogen as a fuel source.

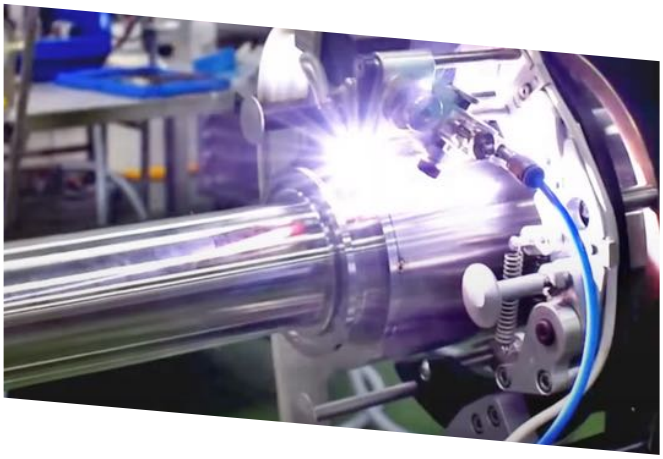

## Tailored Solutions for Diverse Industries

Recognizing the diverse applications of liquid hydrogen, we offer tailored solutions that cater to the specific needs of various industries. Whether it's the automotive sector seeking efficient and rapid refueling solutions, the industrial realm requiring precise temperature control, or the power generation field aiming for reliable and clean energy production, CSM's cryogenic expertise enables us to customize product solutions that align with the unique requirements of each industry.



# Product Application

## Production and Distribution of Liquid Hydrogen for Large Infrastructures

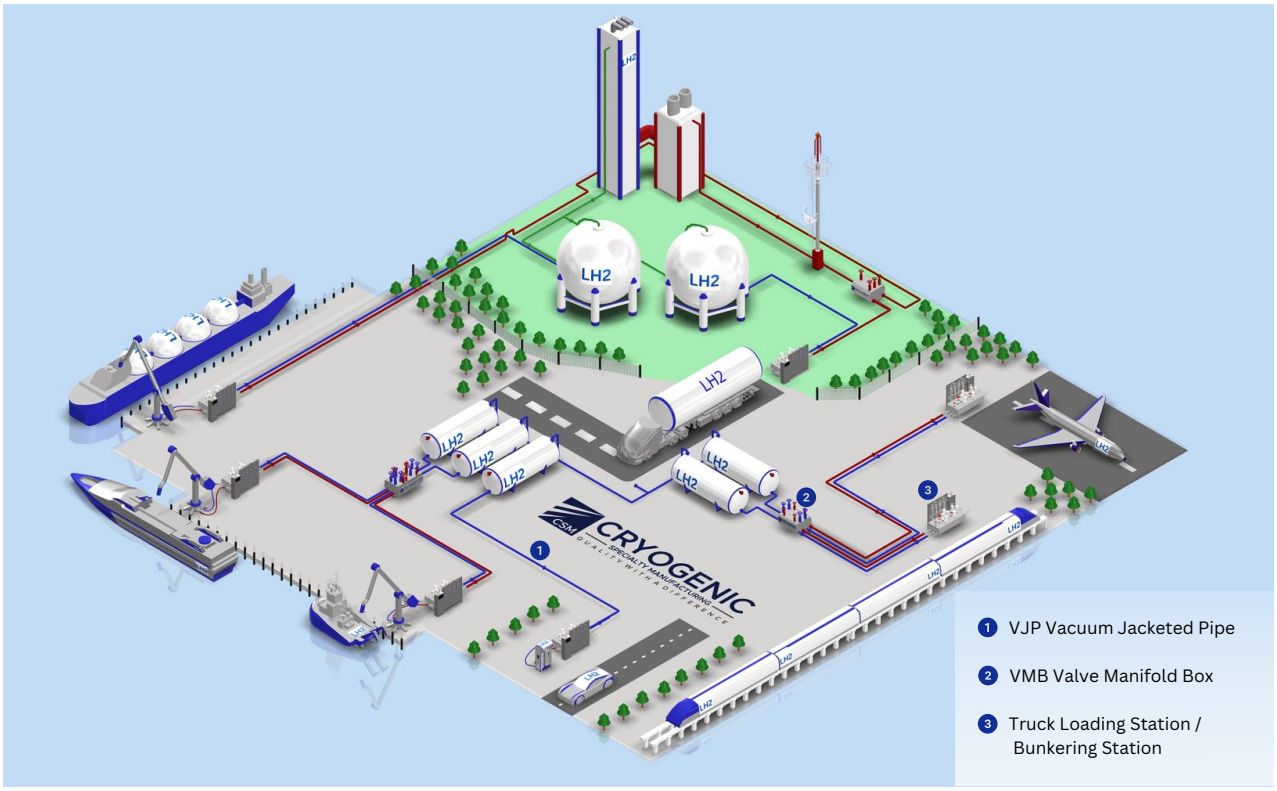


Liquid hydrogen (LH2) stands at the forefront of clean energy solutions, particularly in sectors demanding high energy density and rapid refueling capabilities, such as heavy transport, industrial processes, and other large infrastructures.

## Features and Benefits of Liquid Hydrogen for Large Infrastructure

***1. High Energy Density:*** Liquid hydrogen's superior energy density makes it ideal for marine vessels and power plants, where maximum energy density is prioritised. Its ability to store more energy in less space is crucial for the operational efficiency of ships and the consistent energy output required by power plants.

***2. Emission-Free Operations:*** Utilizing liquid hydrogen as a fuel source in marine and power plant operations drastically reduces the emission of harmful pollutants, aligning with global initiatives to combat climate change and promote sustainability in heavy industries.

***3. Superior Energy Storage:*** Liquid hydrogen provides a more effective solution for long-duration energy storage compared to batteries. Liquid hydrogen can deliver continuous, high-output energy supply necessary for powering large-scale operations like marine vessels and power plants. It is particularly advantageous for applications requiring uninterrupted power over extended periods.

## CSM Vacuum Insulated Products for Large Infrastructures



*Bellow Valve CRYOValv+*

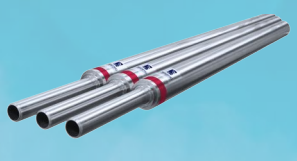

*R-Series Pipes*

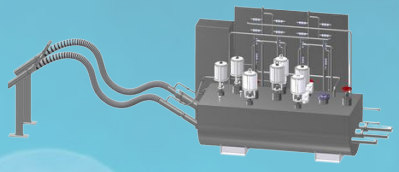

*LH2 Loading Skid*

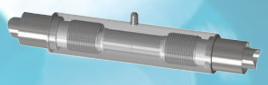

*W-Series Welded Connection*

# Product Application

## Liquid Hydrogen Refuelling Station for Vehicle & Drone

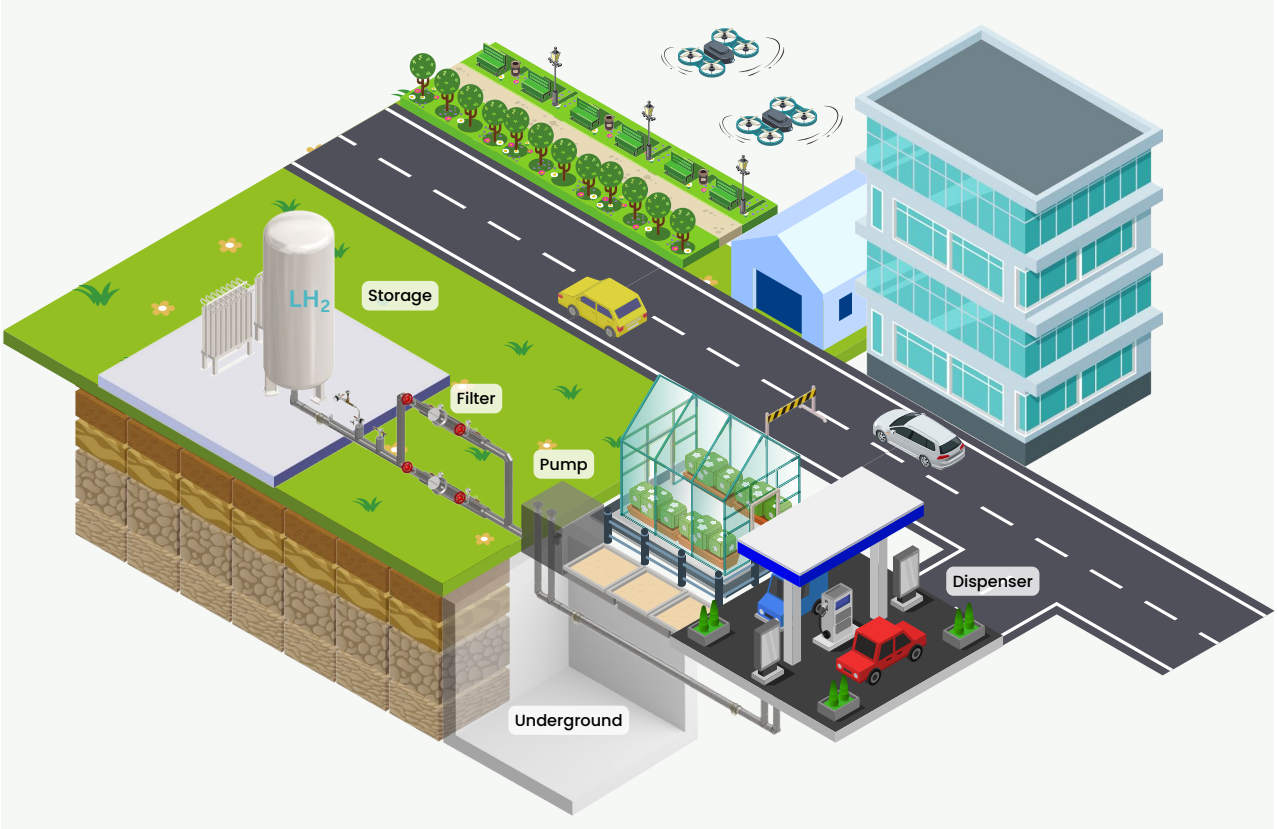


Liquid hydrogen finds a compelling application in the realm of vehicles, revolutionizing transportation with its unique attributes. Let's explore how liquid hydrogen powers vehicles and the advantages it brings to the table. Liquid hydrogen serves as an exceptional fuel for fuel cell vehicles, offering a sustainable and efficient alternative to conventional internal combustion engines. In this application, hydrogen fuel cells combine hydrogen from a liquid storage tank with oxygen from the air to produce electricity through an electrochemical reaction.

## Features and Benefits of Liquid Hydrogen in Transportation

***1. Zero Emissions:*** One of the most significant advantages of liquid hydrogen in vehicles is its zero-emission nature. When hydrogen reacts with oxygen in the fuel cell, the only byproduct generated is pure water vapor.

***2. Extended Driving Range:*** Liquid hydrogen vehicles can achieve impressive driving ranges. The high energy density of liquid hydrogen allows for efficient energy storage, enabling vehicles to cover substantial distances without the need for frequent refueling.

***3. Rapid Refueling:*** Unlike battery-powered vehicles that require a lengthy charging time, refueling liquid hydrogen vehicles is quick and comparable to conventional gasoline refueling. It takes only a few minutes to refill the liquid hydrogen tank, providing convenience and eliminating range anxiety.

## CSM Vacuum Insulated Products for Refuelling Station



*Bellow Valve*
*CRYOValv+*

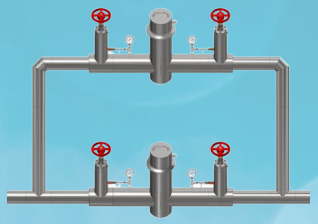

*Modular T-Filter*

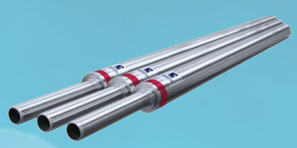

*R-Series Pipes*



*F-series*
*Flexible Hoses*

# CSM Cryogenic Transfer Pipe

## StatiRigid R-series Vacuum Insulated Transfer Pipe



Engineered as modular sections, these stainless steel coaxial vacuum insulated piping spools are joined together with close tolerance bayonet connections, or welded connection forming a complete cryogenic transfer system.

Each section is evacuated, sealed and tested for vacuum integrity to ensure minimal heat gain. StatiRigid comes with internal bellows at required intervals to serve as thermal compensators with 10,000 fatigue cycles calculated based on EJMA standard. The pipe comes with smooth inner bore to minimize pressure drop and improve flow characteristics.

Installation for StatiRigid can be done easily both indoor and outdoor, by incorporating CryoFlex sections strategically to offset misalignments.

## Features and Benefits

- StatiRigid pipe is easy and cost effective to install due to its modular design
- 40x greater thermal efficiency compared to foam insulated pipes
- Excellent flow characteristics make StatiRigid an ideal as main supply pipe and as header pipe
- Super insulation and proprietary chemical getters ensures long lasting vacuum integrity
- Fabricated with automated welding systems and procedures, ensuring consistent weld quality and long-term performance

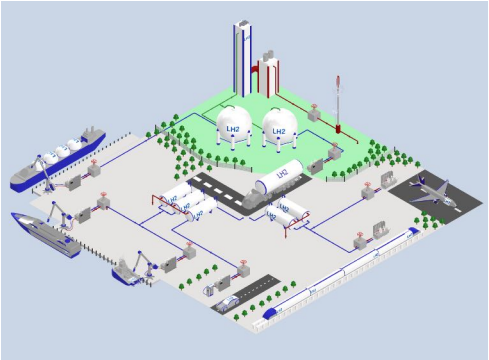

StatiRigid piping is used throughout a cryogenic system for safe and efficient transfer of cryogens

## StatiRigid Technical Specifications

| Model | Inner Rigid Pipe Size | Nominal Jacket OD* | Actual Flow Diameter | Standard Overall Lengths | Hole Required to Accommodate Pump Out** | Bayonet Clamp OD (F) | Weight / Length |
|---|---|---|---|---|---|---|---|
| R5T | ¾" ODT19.05mm | 2" PS (60.3mm) | 16.6mm | 6' (1.8m)<br>10' (3.0m)<br>15' (4.5m)<br>20' (6.0m)<br>40' (12.0m) | 4"(100mm) | 51mm | 2.0lb/ft (3.0kg/m) |
| R5P | ½" PS 21.3mm | 2" PS (60.3mm) | 18.0mm | | 4"(100mm) | 65mm | 2.2lb/ft (3.3kg/m) |
| R10T | 1-1/8"ODT 29.00mm | 2.5" PS (73.0mm) | 26.6mm | | 5 "(120mm) | 65mm | 3.1lb/ft (4.6kg/m) |
| R10P | 1" PS 33.4mm | 3" PS (88.9mm) | 30.0mm | | 5 "(120mm) | 78mm | 4.0lb/ft (5.9kg/m) |
| R15P | 1 ½" PS(48.3mm) | 3 ½" PS(101.6mm) | 1.770" PS(45mm) | | 6"(150mm) | 91mm | 4.9lb/ft (7.3kg/m) |
| R20P | 2" PS(60.3mm) | 3 ½" PS(101.6mm) | 2.245" PS(57mm) | | 7 "(180mm) | 120mm | 5.2lb/ft (7.8kg/m) |
| R30P | 3" PS(88.9mm) | 5" PS(141.3mm) | 3.334" PS(85mm) | | 8" (200mm) | 145mm | 9.7lb/ft(14.4kg/m) |

***Larger pipe sizes such as 6" to 14" available. Please contact factory for details.**

## StatiRigid Flow Guide Line

| Model | Nominal Flowrate @30m, ΔP 0.1Bar | | | Maximum Flowrate @30m, ΔP 0.3Bar | | |
|---|---|---|---|---|---|---|
| | gpm | lpm | kg/hr* | gpm | lpm | kg/hr* |
| R5T | 3.1 | 11.7 | 500 | 5.2 | 19.8 | 850 |
| R5P | 3.7 | 14.0 | 600 | 6.1 | 23.3 | 1000 |
| R10T | 9.2 | 35.0 | 1500 | 17.8 | 67.7 | 2900 |
| R10P | 13.5 | 51.3 | 2200 | 24.6 | 93.3 | 4000 |
| R15P | 38.1 | 144.7 | 6200 | 73.7 | 280.0 | 12000 |
| R20P | 73.7 | 280.0 | 12000 | 128.9 | 490.0 | 21000 |
| R30P | 214.9 | 816.7 | 35000 | 380.7 | 1446.7 | 62000 |

***Flow guide line developed based on LN2 properties**

# CSM Cryogenic Transfer Hoses

## *F-series Hoses Selection Guide*

**Semi-Flex Static Transfer Hose** Semi-Flex, a semi-rigid bendable pipe with optimal flexibility is suitable for long distance piping system application, an alternative to traditional rigid piping. It's lightweight stainless steel construction reduces cool-down losses to an absolute minimum. Semi-Flex hoses are protected by a high quality and wear resistant stainless steel braided outer covering. Typical hoses are manufactured with pipe thread ends or bayonet connection. These hoses are used in a wide variety of applications as main transfer hose for LH2, LNG, LN2 such as food freezing, semiconductor test handlers, MBE and LN2 dosing applications.

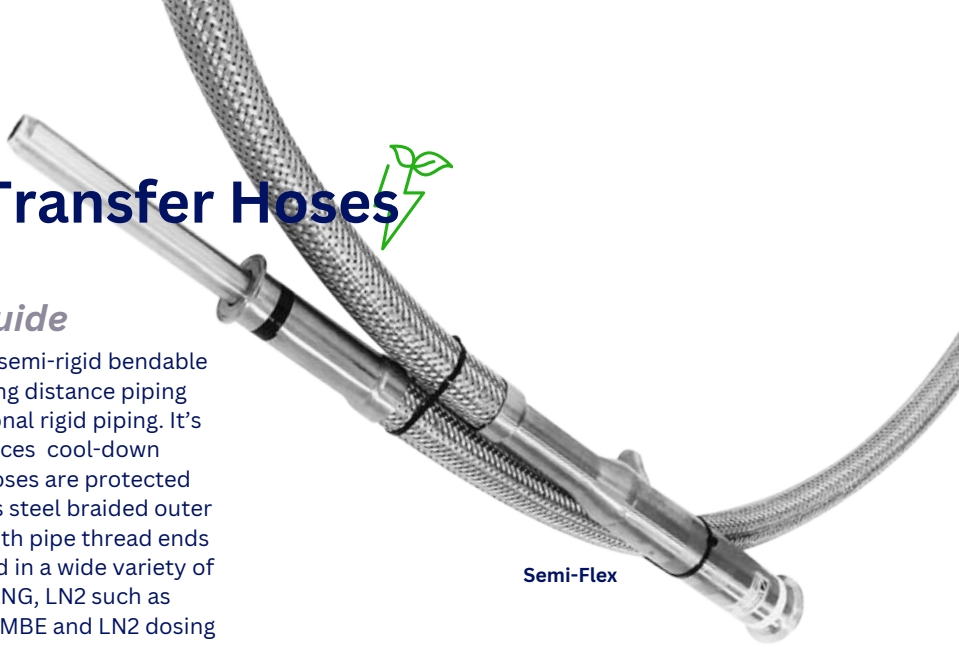

Semi-Flex

**Cryo-Flex Transfer Hose** is a vacuum insulated stainless steel flexible hose designed to meet high flow capacity without compromising its flexibility. Engineered as modular section with close tolerance bayonet connections. It can be used on its own, or as part of StatiRigid sections for misalignment offset. Cryo-Flex pipe is evacuated and sealed at the factory as a static vacuum and is available in dynamic vacuum. Cryo-Flex are available in wide variety of sizes from DN16 up to DN50 to meet most the standard or custom requirements. Cryo-Flex is used in a wide variety of applications including energy, biotech, cryogenic storage, food and beverage, nanotech, environmental temperature chambers and R&D applications.



Cryo-Flex



Ultra-Flex

***Ultra-Flex transfer hose*** is a ultra-flexible, vacuum insulated cryogenic transfer hose with high flexibility. It has the lowest dynamic bend radius among all cryogenic hoses in the market. Due to its lightweight stainless steel construction, cool-down loss can be reduced to an absolute minimum. Ultra-Flex hoses are protected by a tough and anti-kink stainless steel spiral wrap outer covering, its non wire braid prevent potential operator injury due to sharp wire found in traditional braided sleeve. Typical hoses are manufactured with pipe thread ends or female flare 1/2" JIC/CGA fittings or C5 bayonet. These hoses are used in a wide variety of applications including tool connections with portable dewars supplying LN2 to test handlers, LN2 doser, or any moving reservoirs and custom OEM applications.



Triax-Flex

***Triax-Flex ® transfer hose*** when use together with atmospheric Phase Separator system delivers liquid nitrogen (LN2) in pure liquid form at atmospheric pressure. This system ultimately eliminates two-phase flow to use points by constantly venting gaseous vapor to the atmosphere via phase separator. By separating vapor and venting them prior to liquid delivery, only sub-cooled LN2 will be delivered to each use point through gravity. Triax-Flex ® are commonly used in applications where single-phase liquid is critical to the production process such as LH2 active thermal shielding, MBE, LN2 Doser, Cryopreservation or any critical process that demands pure LN2 supply. Triax-Flex® is available in either static or dynamic vacuum insulation. For Dynamic Triax-Flex®, it requires an external pump to continuously evacuate its vacuum annular space to ensure its vacuum insulation integrity. Both static and dynamic systems come with Triax female bayonet connection, elbow, tee, valve or customize connections e.g. A5, A10 or TAL, to the point of use.

# CSM Cryogenic Bellow Valves

**CRYOValv+** Static Seal Vacuum Insulated Valves



## C600 series

**Size Range**
- 1/2” - 4”

**Pressure Ratings**
- 300 psi (20.7 bar) MAWP

**Materials of Construction**
- SS316 body, bonnet and stem
- Oxygen grade O-ring seals
- Self centering PTCFE seat seal

**Design Standards and Compliance**
- ASME B16.34
- Seat Seal Bubble Tight @ 150 psig (10 bar)
- Packing Mass Spec Tested @ 1 x $10^{-5}$ Torr
- Helium Leak Tested to < 1 x $10^{-9}$ cc/s
- Tested to API-598
- Designed and Tested to MSS-SP-134
- ISO 15848

**Temperature Range**
- Designed for -270°C ~ 150°C (-454°F ~ 302°F)

**End Connections**
- Pipe stub ends
- Butt-weld

**Assembly Configurations**
- Vacuum Jacketed and Non-Jacketed
- Extended bonnet/stem per MSS-SP-134
- Custom extended bonnets/stems available
- Cold Box Cuff option
- Oxygen cleaning for Oxygen system compatibility
- (Compatible standard for LH2 service)

**Sealing and Packaging**
- Bellow static seal design to eliminate stem/packing fugitive emissions
- Bellow seal tested to 10,000 cycles
- Self-Centering C-PTFE Seat Seal
- ANSI Class VI Leak Rate

# The connections

## W-series Welded Connections

**Vacuum Insulated Welded Connections** CSM uses a highly efficient field-welded cryogenic connection for vacuum insulated piping systems. Vacuum insulated welded connection ensures lowest heat leak by providing a continuous vacuum insulation between the spool sections. Constructed in stainless steel, the vacuum insulated welded connections are designed with high-quality long heat path transition to be installed with our standard low profile sleeve tube. These design features translate to lowest heat leak and preserve liquid cryogen quality.
Fully welded connection ensure full working pressure up to 35 Bar and suitable for extreme hazardous working environment like petrochemical complex or ASU plant. Connection insulation can be done either by low heat leaks vacuum insulation or polyurethane foam insulation.

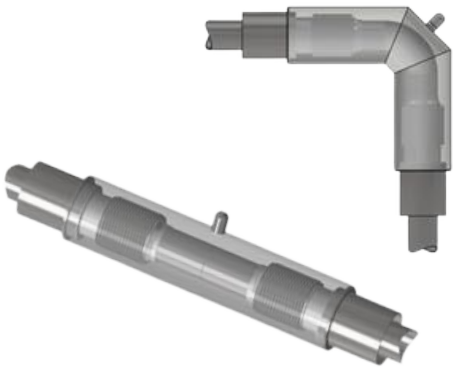

**Typical Applications**

- LNG vacuum insulated rigid lines
- LH2 vacuum insulated flex lines
- Applicable for all cryogenic medium with temperature down to 4 Kelvin

**Features and Benefits**

- Frost and condensation free connections
- Minimization of heat leak
- Easy to install at compact working spaces
- Can be installed in any orientation
- Welded connection ensures high durability & vibration resistant
- Available in Vacuum jacketed or Polyurethane insulation options

## Welded connections Specifications

| Sizes | Max Design Pressure psi (bar) | Vacuum Jacketed Heat Leak BTU / Hr (W) | PU Insulated Heat Leak BTU / Hr (W) | Inner & Outer Jacket Pipe Construction |
|---|---|---|---|---|
| W10 | 500 (35) | 5.46 (1.60) | 50.98 (14.95) | S/S300 |
| W15 | 500 (35) | 5.76 (1.69) | 60.49 (17.74) | S/S300 |
| W20 | 500 (35) | 9.21 (2.70) | 72.05 (21.13) | S/S300 |
| W25 | 500 (35) | 9.34 (2.74) | 78.29 (22.96) | S/S300 |
| W30 | 500 (35) | 13.09 (3.84) | 90.81 (26.63) | S/S300 |
| W40 | 500 (35) | 18.48 (5.42) | 109.87 (32.22) | S/S300 |

***Larger sizes such as 6” to 14” available. Please contact factory for details.**

## Welded connections Dimensions

| Sizes | A | B | C | D | E |
|---|---|---|---|---|---|
| W10 | 1” NB (33.4mm) | 2 ½” NB (73.0mm) | 3 ½” NB (101.6mm) | 5.8” (146.8mm) | 20.5” (520.0mm) |
| W15 | 1 ½” NB (48.3mm) | 3” NB (88.9mm) | 4” NB (114.3mm) | 6.3” (159.5mm) | 21.3” (540.0mm) |
| W20 | 2” NB (60.3mm) | 4” NB (114.3mm) | 5” NB (141.3mm) | 7.4” (186.5mm) | 22” (560.0mm) |
| W25 | 2 ½” NB (73.0mm) | 4” NB (114.3mm) | 5” NB (141.3mm) | 7.4” (186.5mm) | 23.6” (600.0mm) |
| W30 | 3” NB (88.9mm) | 5” NB (141.3mm) | 6” NB (169.3mm) | 8.4” (213.5mm) | 23.6” (600.0mm) |
| W40 | 4” NB (114.3mm) | 6” NB (168.3mm) | 8” NB (219.1mm) | 10.5” (264.5mm) | 27.6” (700.0mm) |

***Larger sizes such as 6” to 14” available. Please contact factory for details.**

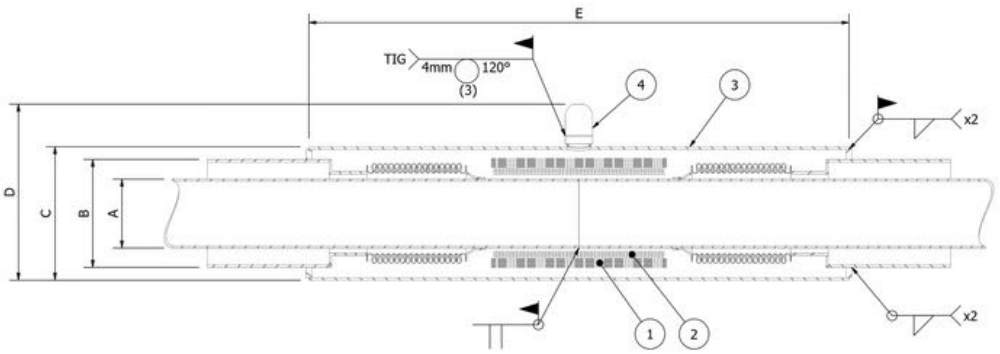

# Turnkey Solutions

## *Benefits to customer*

**Single source**, single responsibility from system design, manufacturing, install, test & commissioning

**Single Project Management** with lowest overall project cost, Lowest heat leak & lower cryogen losses

**Integration** with safety function & performance monitoring system e.g. O2 monitoring and emergency shut-down system; temperature, pressure & flow monitoring

**Integration** to FMCS is seamless by Standardized communication protocol with MODBUS TCP/IP

## *What We Offer*

- A 5 + 5 years warranty on all rigid vacuum jacketed pipe.
- On-site measurements.
- Most efficient layout of the vacuum jacketed pipe system required for your application.
- Detailed proposal describing every component of the vacuum jacketed pipe system.
- Manufacturer's specifications of the system presented for your review.
- Isometric CAD drawing showing every detail of the proposed system.
- Break-even analysis on anticipated return on investment and long-term financial benefits to operation's bottom line.
- Cash flow analysis to show immediate effect the new system will have on your operations.

## *Turnkey Solutions System*

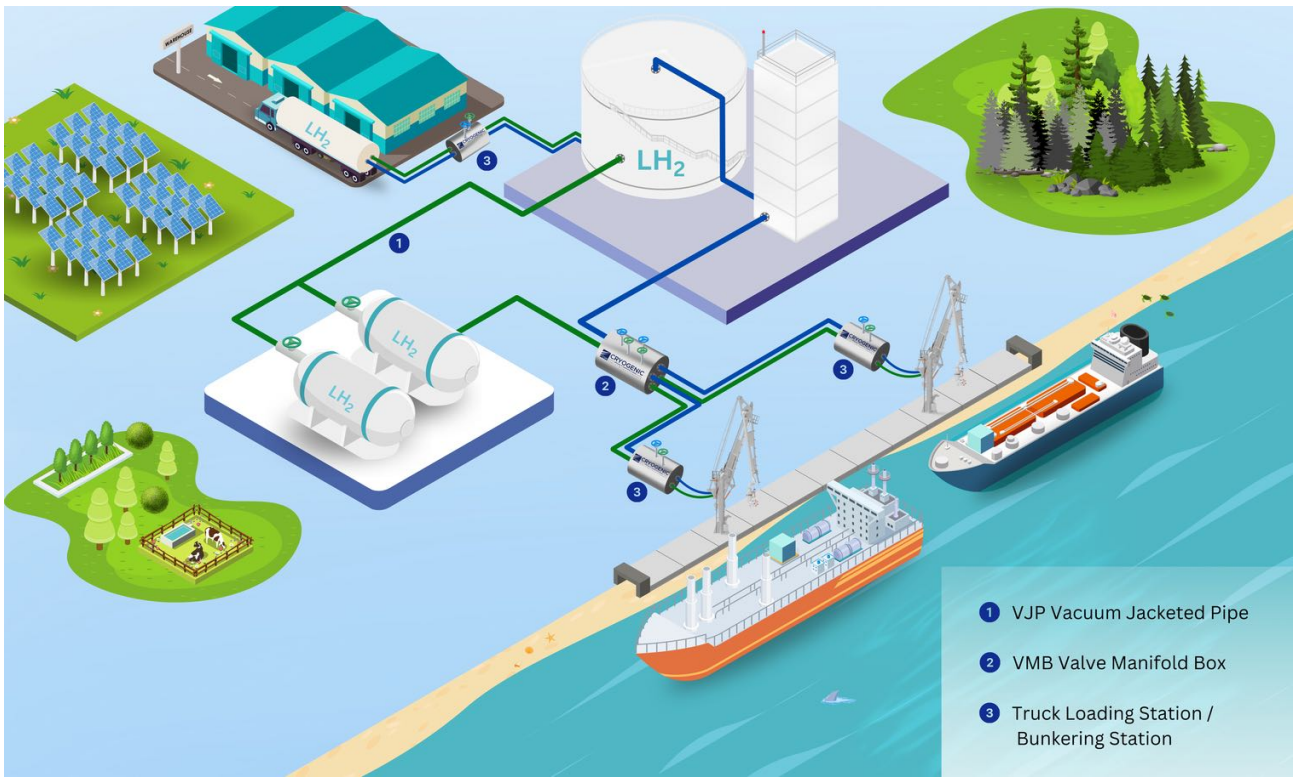

# Notes

# Worldwide Sales & Service

**Cryogas Sdn Bhd**
*No 10, Jalan PPU 3A, 47150 Puchong, Selangor, Malaysia*
*Tel : +603-8051 0982 Fax : +603-8051 0913*
*E-Mail : info@cryogas.asia*

**Cryogas International Trading (Shanghai) Co Ltd**
*RM1122, No.55 Jilong Road. Waigaoqiao Free Trade Zone, Pudong, Shanghai P.R.China 200131*
*Tel : +86-21-6106-1937 / 6106-1939Fax : +86- 21-6106-1938*
*E-Mail : info@cryogas.asia*

**Cryogas Pte Ltd**
*531A Upper Cross Street #04-95*
*Hong Lim Complex. Singapore 051531*
*Tel : +65-8280-8803*
*E-Mail : david.chan@cryogas.asia*

**Cryogenic Systems BV**
*Kossenland 19, 1834 BJ Sint Pancras, Netherlands.*
*Tel : +31 6 11319918*
*E-mail : josglorie@cryogenicsystems.nl*



**Manufacturing**
**Global Sales & Technical support**

CSM CRYOGENIC
SPECIALTY MANUFACTURING
QUALITY WITH A DIFFERENCE

**Cryogenic Specialty Manufacturing Sdn Bhd**
*No 10, Jalan PPU 3A, 47150 Puchong,*
*Selangor, Malaysia*
*Tel : +603-8051 0982*
*Fax : +603-8051 0913*
*E-Mail : info@csm-cryogenic.com*